

Our “swellable” solution against water penetration into your cables with unique swelling property of up to 50 times its own weight. Our most common grades are 1800 Deniers and 2500 Deniers and they can be placed either longitudinally, helically or used as binder yarns.

=> monthly capacity 4 000kg

MATERIAL SAFETY DATA SHEET

ISO 9001 CERTIFICATE

Water Swellable Yarns Characteristics

ITEM	UNIT	TEST METHOD	1800D VALUE	2500D VALUE
Appearance	Shall be Good	–	Good	Good
Linear Density	Deniers	ASTM D 1059	1,800 ± 300	2,500 ± 300
Tensile Load	Kgf	ASTM D 2256	Min. 8.0	Min. 10.0
Elongation at break	%	ASTM D 2256	Min. 8.0	Min. 8.0
Shrinkage	%	175’C*1 hour	Min. 10.0	Min. 10.0
Water Absorption	%	–	Min. 2000	Min. 2000



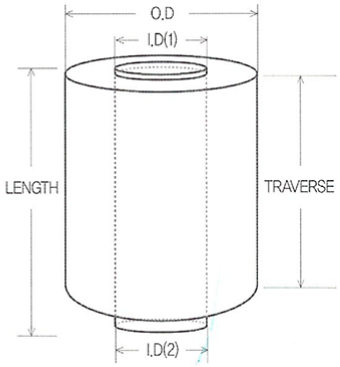

Spool Dimensions (Cylindric Tube)

	UNIT	SIZE
O.D	mm	230 ± 5.0
I.D(1)	mm	95 ± 1.0
I.D(2)	mm	107 ± 1.0
TRAVERSE	mm	196 ± 3.0
LENGTH	mm	219
LENGTH PER SPOOL	km	25
WEIGHT	kg	5.5



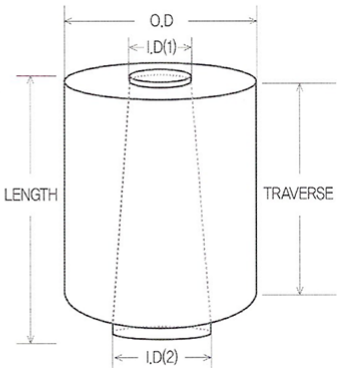

Spool Dimensions (Conical Tube)

	UNIT	SIZE
O.D	mm	250 ± 10
I.D(1)	mm	33 ± 10
I.D(2)	mm	70 ± 1.0

	UNIT	SIZE
TRAVERSE	mm	202 ± 3.0
LENGTH	mm	232
LENGTH PER SPOOL	km	29.5
WEIGHT	kg	6.2~6.4